REINFORCED EXTENDED RING FOUNDATIONS FOR TOP-UNLOADING CONCRETE TOWER SILOS

J.E. Turnbull, H.A. Jackson, and D. Lowe

Engineering and Statistical Research Institute, Research Branch, Agriculture Canada, Ottawa, Ontario, K1A 0C6, ESRI contribution no. 596

Received 20 September 1978

Turnbull, J.E., H.A. Jackson, and **D. Lowe**. 1979. Reinforced ring foundations for top-unloading concrete tower silos. Can. Agric. Eng. 21: 111-116.

Weak soils require special foundation designs to spread the load of tall tower silos over sufficient soil-bearing area to maintain an adequate safety factor. Eccentricity of silo wall loads and soil reaction pressures frequently cause the annular ring footing to rotate and break into sectors. In this design, the annular ring is reinforced with a flat continuous spiral of steel to resist rotation, and the majority of the footing width is located beyond the silo wall to increase total bearing area under the silo. Design criteria were based on the Canadian Farm Building Code (1977), and solutions were calculated for soils ranging from 72 to 288 kN/m² (1500 to 6000 lb/ft²) safe bearing pressures.

INTRODUCTION

As more and more large tower silos are built on supporting soils of undetermined bearing capacities, the number of cases of settled, leaning and overturned silos in Canada continues to increase. A previous paper (Bozozuk 1974) dealt with factors which determine the safe allowable bearing pressures of clay soils under tower silo foundations. This paper deals with a design procedure for silo foundations capable of spreading the load of a single silo plus contents over sufficient soil area for safe support.

A tower silo can easily overload the area of soil directly under the silo cylinder and floor. Then it is necessary to spread the weight of the silo and contents over a bearing area considerably greater than the base of the silo cylinder. The reinforced extended ring foundation described here is a method of increasing the foundation bearing area beyond the wall of the silo cylinder without wasting unnecessary foundation concrete and reinforcing steel under the silo floor.

NOMENCLATURE

a	=	angle subtended by unit wall circumference	rad
A_L	=	section area of rebars to resist lateral pressure	mm²
A_S	=	section area of rebars to resist moment	mm²
B	=	breadth of footing	m
C	=	centroid of a sector of footing ring (see Fig. 2)	
D	=	silo inside diameter	M
δ	=	silage load at 70% moisture	kN/m³
d	=	footing depth	m
e	=	eccentricity of silo wall load with respect to *c*	m
F	=	silage friction load on wall per unit of circumference	kN/m
f'_c	=	28-day compressive strength of concrete	MPa
f_s	=	steel safe working stress	MPa
H	=	silo wall height	m
h	=	silage height = (H — 1.5)m	m
k	=	cone height/diameter ratio = 4.72 (Code, 1977)	
L	=	lateral silage pressure on silo walls	kPa
P	=	safe soil bearing pressure	kPa
ρ	=	steel/concrete area ratio	
R	=	soil reaction at centroid of footing sector	
S	=	silo dead load (wall + roof + unloader) per unit circumference	kN/m
T_s	=	spiral steel tension force	kN
W	=	total silage load per unit of silo circumference	kN/m

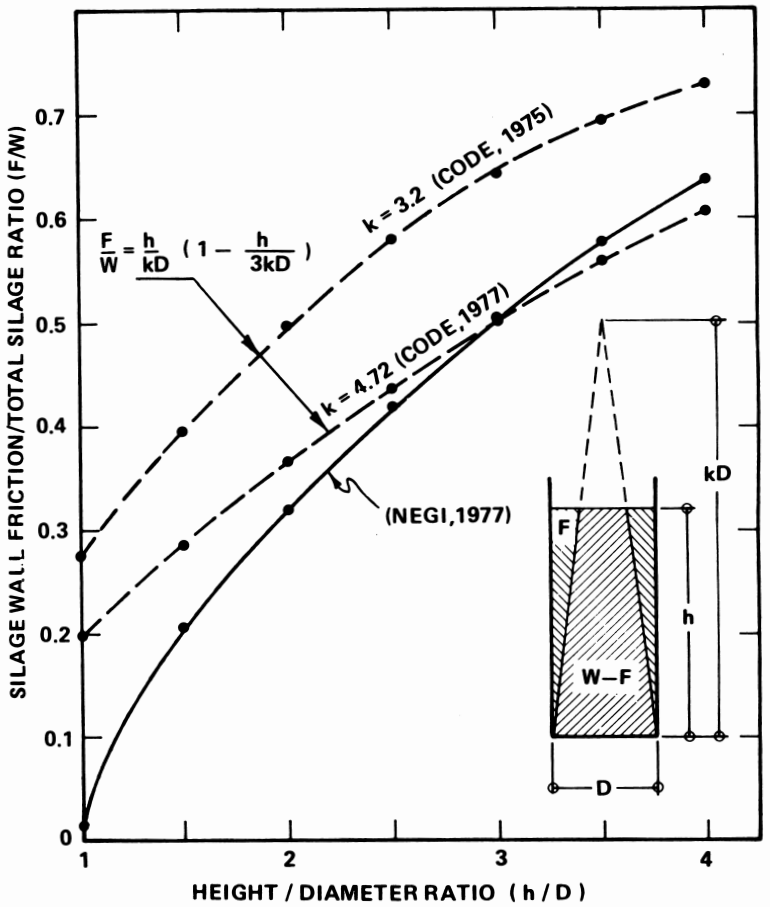

Figure 1. Silage wall friction versus height/diameter ratio for concrete tower silos.

REQUIREMENTS FOR SILO FOUNDATIONS

The Canadian Farm Building Code, hereafter referred to as the "Code" (Standing Committee on Farm Building Standards 1977) gives requirements for tower silo foundations, summarized as follows:

(1) The base of a tower silo intended for whole-plant silage should have a floor and drainage system designed to prevent silage liquids from penetrating the soil under the footing and floor (floor and drainage details as shown in Fig. 2 are designed to satisfy this requirement).

(2) The footing should be designed to resist bending moments caused by silo wall and soil reaction loads (most foundation failures to date have been

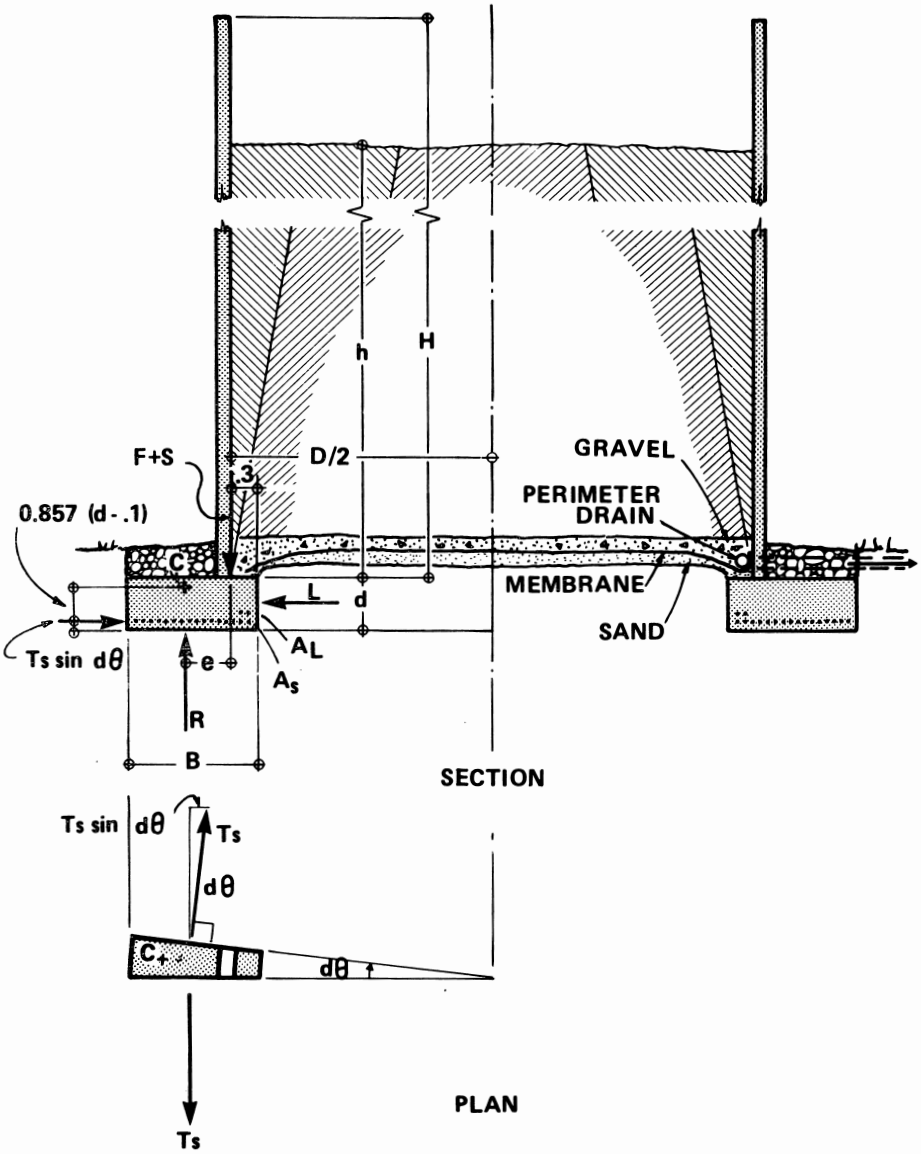

Figure 2. Section and plan of extended ring silo foundation.

accompanied by breakup of the footing ring into segments, thereby causing a ring of concentrated load to develop directly under the silo walls.

(3) The foundation ring should be reinforced circumferentially to withstand the same lateral pressures as the bottom of the silo wall (Bozozuk 1974).

(4) The width of an annular footing ring should be based on providing sufficient bearing area at the critical soil bearing surface to support the silo roof, equipment, wall and footing, plus vertical wall friction.

(5) Total bearing area under footing plus floor should be sufficient to safely support the total weight of silo, foundation and contents (this last requirement may or may not be met by satisfying requirement (4) above, depending on the required proportions of the silo and foundation ring).

The Code (1977) does not specifically mention design of silo foundations for wind effects. Although many concrete stave silos have been demolished by wind, the wind-caused failures seen to date have not been due to foundation or soil failure, but rather to collapses of the empty walls or roofs.

To check wind effects on silo foundations, a calculation was done to estimate the amount of "tilt" required of the soil reaction diagram in order to balance the overturning pressure of a "design" windstorm at Ottawa. For a 7.2 x 21.6-m silo, with outside footing radius selected to load the soil to 96 kPa (2000 lb/ft²), the extreme increment of soil reaction pressure due to wind would be only ± 5% of the mean bearing pressure. This small increment, plus the remote possibility of a maximum wind blowing from the most critical direction when the silo is filled, all seem to indicate the design of silo foundations for wind is superfluous. In tall structures of lesser weight, this would not necessarily be true.

Silage density and wall friction for estimating floor and wall loads

The 1977 Code gives an equation for estimating that part of the silage which would be supported by wall friction, as follows:

$$F = \frac{Wh}{4.72D}\left(1 - \frac{h}{14.16D}\right) \quad \ldots\ldots\ldots\ldots \quad (1)$$

Equation 1 is based on the assumption that the silage-to-wall vertical friction F, accumulated to the base of the wall, is the mass of silage contained above a right circular cone with base the floor of the silo and height h of 4.72 times the silo diameter at the silo vertical center line (see Fig. 1).

There are recent indications that Eq. 1 reasonably estimates the wall friction load for 70% moisture of silage stored from 9 to 24 m depth. M. Bozozuk (National Research Council, personal communication) calculated from measurements of vertical soil stresses under one silo footing and floor that about 50% of the silage weight was supported by the wall. In this case, the floor load due to silage corresponded with a cone 4.72 silo diameters in height, instead of 3.2 silo diameters as per the 1975 code.

Negi et al. (1977) measured wall friction experimentally in a scale model silo with varying height/diameter ratio; their results when replotted also showed closer agreement with the "cone" concept when the cone height is adjusted to 4.72 silo diameters (see Fig. 1). Since the cone concept is easier to apply and seems to result in errors slightly on the safe side with wider silos, this concept was used in calculations to determine required footing widths.

To apply the cone concept for estimating wall friction loads, uniform silage density throughout the silage depth has been assumed. Averaged silage densities were taken from the Code (1977).

DESIGN ASSUMPTIONS AND EQUATIONS

1. **Estimating Silage Load, W**

Total estimated silage vertical wall friction was based on the cone concept (see Fig. 1) with cone height/diameter ratio k = 4.72.

Total silage load in a cylinder is $\delta\pi D^2 h/4$. The silage load W enclosed by a unit sector of wall (1 metre of circumference) then becomes

$$W = \delta D h/4 \quad \ldots\ldots\ldots\ldots \quad (2)$$

2. **Estimating Silage Friction Load on Wall, F.**

Combining Eqs. 1 and 2 gives

$$F = \frac{\delta h^2}{18.88}\left(1 - \frac{h}{14.16D}\right) \quad \ldots\ldots\ldots\ldots \quad (3)$$

3. **Calculating Footing Width, B**

The dead load (S) of silo wall plus roof and equipment is a very significant part of the footing load with concrete silos. The wall

part was calculated on the basis of 63-mm thick concrete staves or 150 mm thick cast-in-place concrete, each at 23.56 kg/m³ (150 lb/ft³). To this was added the weights of roof, unloader, etc. based on manufacturers' shipping weights, all divided by πD to give loads per unit of circumference.

The ring footing was arbitrarily set with inside radius a constant 0.3 m less than the radius of the silo (see Fig. 3). Thus total bearing area under a sector of the ring footing corresponding to one unit of wall circumference becomes

$$\frac{B}{D}(B + D - .6)$$

Beyond the basic requirement that footing width B must be sufficient to support the silo, plus silage-on-wall friction loads, B must be further increased to support the considerable load of the footing itself. A convenient way to do this is to reduce the allowable unit bearing pressure of the soil by an amount equal to the load of the footing, which is in turn the density of reinforced concrete times the depth d. Net allowable bearing pressure thus becomes $P - 23.56d$.

This method is based on the assumption that the soil reaction pressure is uniform under the whole area of the footing ring. This is not necessarily true, but the assumption of uniform reaction pressure is simpler and is on the safe side, from the standpoint of footing design. Further research will hopefully indicate a more realistic distribution of reaction pressures and permit future economies in the design of extended ring footings.

The equation for footing width B can be written thus:

$$F + S = \frac{B}{D}(B + D - .6)(P - 23.56d)$$

$$B^2 + B(D - 2) - \frac{D(F + S)}{P - 23.56d} = 0 \quad \ldots\ldots (4)$$

4. **Calculating Eccentricity, e**

The extended ring foundation (see Fig. 2), when loaded, rotates outwards at the bottom, and without reinforcement it can break into separated sectors due to the eccentricity e of the resultant soil reaction R with respect to the wall loads $(F + S)$. With proper circumferential reinforcement to resist this rotation, the ring becomes analogous to a concrete beam where the spiral steel A_S acts in tension near the bottom and is balanced by concrete acting in compression at the top. It can be shown that this eccentricity is:

$$e = \frac{2}{3}B\left[\frac{\frac{3}{2} + \frac{B}{D/2 - .3}}{2 + \frac{B}{D/2 - 0.3}}\right] - .3 \quad \ldots\ldots\ldots\ldots (5)$$

5. **Steel/Concrete Area Ratio**

Equation 4 above has two unknown terms, B and d; therefore additional equations are required. Footing depth d must provide enough concrete in compression to balance the spiral steel tension; a steel/concrete area ratio $\rho = 0.009$ was chosen to ensure an underreinforced beam section. This gives

$$A_S = 9000\,B\,(d - 0.1) \quad \ldots\ldots\ldots\ldots\ldots (6)$$

6. **Spiral Steel Area (A_S) to Resist Footing Rotation**

In Fig. 2, the eccentricity e of wall loads $F + S$ in relation to soil reaction R develops a couple which tends to rotate any sector of the footing ring outwards at the bottom and inwards at the top. In this, the footing ring is somewhat analogous to a beam stressed in bending; rotation of any sector defined by a small horizontal angle $d\theta$) is resisted by the "beam" action of concrete acting in compression in the top of the ring, and by a flat-wound continuous spiral of steel acting in circumferential tension near the bottom. The steel is placed as a continuous spiral using the longest rebar lengths obtainable, to minimize and randomize the end-laps.

For any sector of footing defined by small angle $d\theta$, the wall load is $(F + S)\,D/2\,d\theta$, and the "load" moment developed by this eccentric load is $M = e(F + S)\,D/2\,d\theta$.

The resisting moment to balance this is developed by the radial component ($T_S \sin d\theta$) of the steel tension, acting about point C, the assumed centroid of the circumferential compression forces in the top part of the concrete ring. Using working stress design methods (CSA Standard A 23.3, 1970), the effective depth of the steel is about 0.857 $(d - 0.1)$, and the resisting moment M_r developed by steel/concrete interaction is

$$M_r = T_S \sin d\theta\,(0.857)(d - 0.1).$$

But $T_S = A_S f_S$, $f_S = 165.5$ mPa for grade 50 000 steel, and $\sin d\theta \cong d\theta$ for very small angles, therefore

$$M_r = 165.5\,A_S\,.\,d\theta\,(0.857)(d - 0.1)$$

For equilibrium, equate load moment M to resisting moment M_r; therefore

$$e\,(F + S)\frac{D}{2}\,d\theta = 165.5\,A_S\,.\,d\theta\,(0.857)(d - 0.1)$$

from which

$$A_S = \frac{10^3\,De\,(F + S)}{2(165.5)(0.857)(d - 0.1)} \quad \ldots\ldots (7)$$

Note that the bearing line of silo wall loads $F + S$ was taken at the inside wall circle, to allow for the unknown silage pressures acting vertically on the inside heel of the footing.

7. **Calculating Footing Depth D**

Combining Eqs. 6 and 7 gives

$$9000\,B\,(d - 0.1) = \frac{De\,(F + S)}{2(165.5)(d - 0.1)}$$

$$\therefore\ (d - 0.1)^2 - \frac{De\,(F + S)}{2553B} = 0 \quad \ldots\ldots (8)$$

In practice, Eq. 8 is solved for d, and this is fed back into Eq. 4 to adjust the allowable bearing pressure of the soil (see $P - 23.56d$).

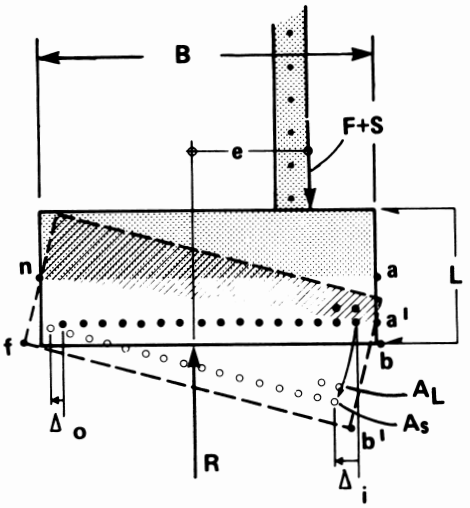

Figure 3. Diagram of footing ring with exaggerated rotation and displacement due to eccentric loading.

A process of iteration is used to obtain a more exact value for depth d, then Eq. 7 is solved to obtain the spiral steel area, A_S.

8. **Reinforcing for Lateral Pressure Inside Footing Ring**

Additional spiral steel is required to resist lateral pressure on the footing ring resulting from the silage load on the floor. The exact nature of this soil pressure is not known, but it is assumed here that it is equal to the lateral pressure of the silage at depth h.

For lateral silage pressure L at silage depth h, the Code gives

$$L = 4.785 + 0.579h\,(D - 0.6)^{0.55}$$

Since this pressure is applied to the inside of the footing ring, the diameter reduces to $D - 0.6$, and the required extra spiral steel area A_L at safe working stress is therefore

$$A_L = \frac{10^3\,d\,(D - 0.6)}{2(165.5)}\left[4.785 + 0.579h\,(D - 0.6)^{0.55}\right] \quad \ldots\ldots\ldots\ldots\ldots (9)$$

The location of this extra steel is subject to some judgment. One approach would be to arrange it vertically near the inside edge of the footing, corresponding to the circumferential steel in the silo wall above. However, only a few turns of steel are required to provide area A_L, and to be effective it should be located where tensile strain approaches a maximum in the footing ring. Figure 3 shows a section diagram of the footing ring, with rotation under load exaggerated to show displacement effects. At the beginning of loading the neutral axis of the concrete "beam" is assumed to be a horizontal line (n to a) above which the shaded portion of the concrete is under compression. With rotation under full eccentric loads, the neutral axis rotates through a smaller angle ($a\,n\,a'$) than does the section as a whole (angle bfb'). The compression concrete towards the outer

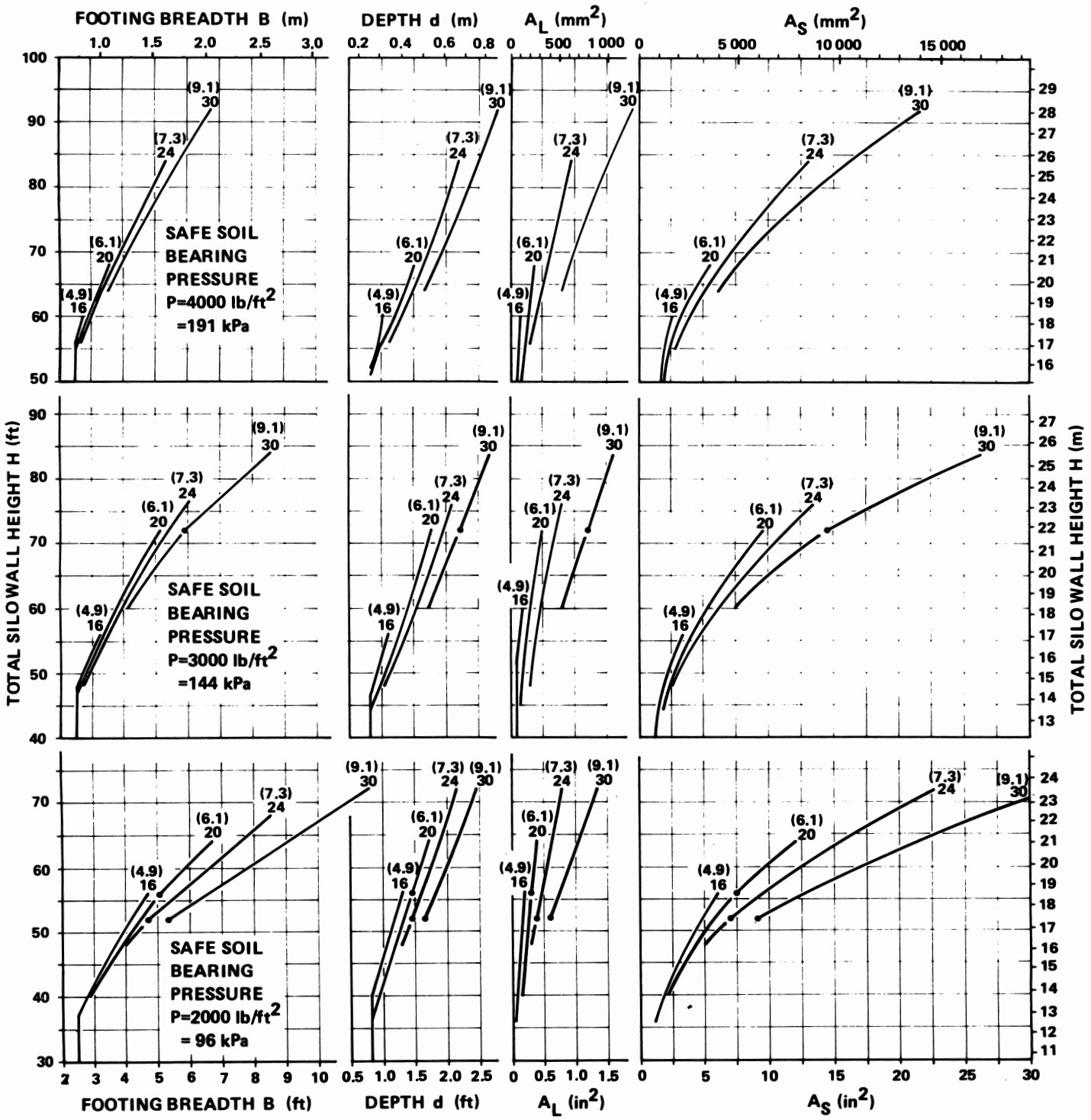

Figure 4. Design requirements of extended ring foundations for cast-in-place concrete tower silos. Numbers at top end of each curve are nominal silo diameters, ft (m).

perimeter of the footing assumes a greater share of the circumferential compression forces.

Similarly the innermost turns of circumferential steel are displaced outwards more than the outermost steel ($\Delta_i > \Delta_o$) and the inner turns of steel are therefore under higher tensile strain and stress. On this basis the additional steel area (A_L) required to resist lateral pressure L should be located as shown in Fig. 2.

9. Average Bearing Pressure Under Footing and Floor

The above analysis may or may not satisfy the fundamental requirement that the total soil area under footing plus floor must be sufficient to support the total weight of the silo, foundation and contents. With weaker soils and taller silos this last requirement tends to apply. Thus the important dimension is the outside footing radius ($D/2 + B - 0.3$), and the area under a sector corresponding to a unit of silo wall circumference is therefore $(D/2 + B - 0.3)^2/D$. A calculation is required to find if

$$\frac{(D/2 + B - 0.3)^2}{D} \geqslant \frac{W + S}{P - 23.56d} \quad \ldots\ldots (10)$$

If not, an iterative procedure is required to increase B and recalculate d in steps until Eq. 10 is just satisfied, then recalculate A_S and A_L.

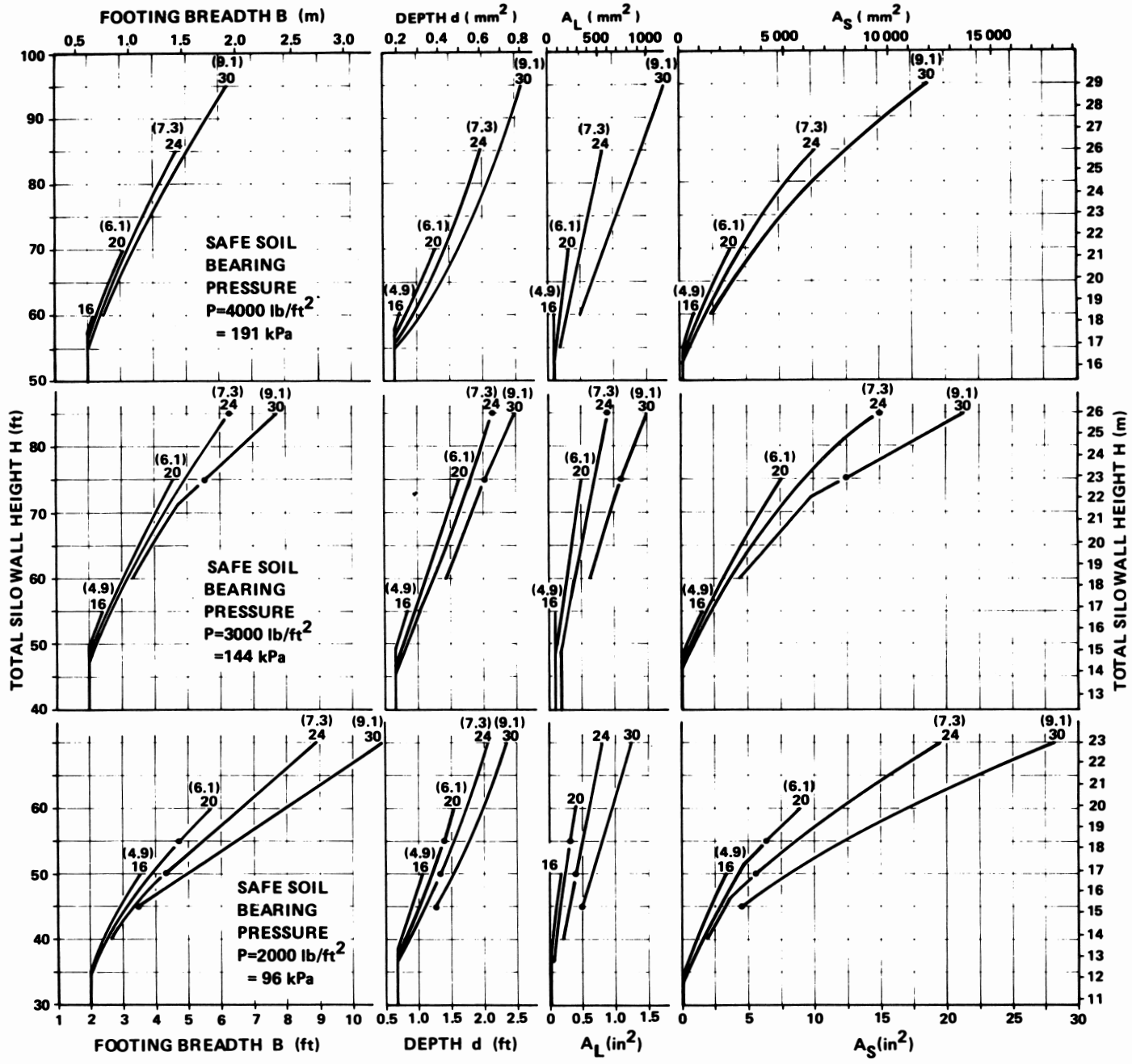

Figure 5. Design requirements of extended ring foundations for concrete stave tower silos. Numbers at top end of each curve are nominal silo diameters, ft (m).

10. **Shear Through Footing Depth**

A shear check by the method required by CSA Std. A23.3 (1970) shows that safe concrete shear stresses are likely to be exceeded only with very tall silos on very weak soils. This situation applies beyond the limits of Figs. 4 and 5. Since the equations for checking shear are rather complicated in this case, they were omitted for brevity.

To support the spiral steel A_S during placing of the footing concrete, and to ensure that the concrete develops the required shear resistance, radial rebars are recommended. Rebars (Size 10M) spaced at 0.6 m can be supported on dowels or stakes driven into the bottom of the footing trench. This forms a platform for wiring the spiral rebars in place and centered 100 mm above the trench bottom.

DESIGN RESULTS

Figures 4 and 5 show curves derived from computer calculations to give the engineering requirements of extended ring foundations; Fig. 4 is for cast-in-place concrete, and Fig. 5 is for concrete staves. Three soil bearing strengths were assumed in each case.

Referring to the curves for footing breadth B, the lower parts of each curve were derived from Eq. 4 based on wall loads and footing bear area. Footing widths plotted above each dot in the curve were based on Eq. 10 which relates the total base area (footing plus floor) to the total silo load. Note that this latter requirement controls for taller silos on weaker soils; the dots shift upwards and vanish off the top of the curves as soil bearing pressure P increases. In some cases (Fig. 5, 9.1-m diameter silos on P = 144 kPa (3000 psf) soil, for example), the curves break below the dot; the computer checked at 1.5-m height intervals but there the extrapolated curves intersected about 1 m below the checkpoint dot. Note that B on **H** is a curved function below the dots, but that B is a linear function of H above the dots where total silo base area controls.

Footing breadth B was arbitrarily set at 0.76 m minimum for the cast-in-place

concrete silos and 0.61 m for the lighterweight silos made with concrete staves (see Figs. 4 and 5, respectively). These dimensions were considered to be practical minima for excavation with a small backhoe; they also prevent a negative value for eccentricity dimension e (Fig. 2) and corresponding negative steel requirement.

Note that circumferential steel area (A_L) to resist lateral pressure is typically less than 5% of the steel area (A_s) to resist footing bending moments.

DISCUSSION

Builders of cast-in-place concrete silos have concrete, reinforcing steel and a steel-bender on site. For these builders, the reinforced extended ring foundation described here poses no particular problems. Concrete stave silo builders, however, prefer the usual plain concrete footing placed into a circular trench in the ground. The trench is filled with concrete up to grade line where the first ring of wall staves begins. This requires considerably more concrete, but allows simplicity and reduced labor. On softer soils, the resulting plain footing is seldom as wide and never reinforced as good engineering would require.

Silo builders have asked for designs for plain footings balanced under the silo wall, in preference to the reinforced extended ring. However, until more is known about the distribution of silo floor loads and soil reaction pressures, it is not possible to proportion a plain footing so that no rotational moments can develop. The plain footing also lacks reinforcing to resist tangential bending moments due to the concentrated line load of the silo wall (Code, requirement (2) above), and lateral soil expansion forces due to silage pressure on the floor (Code, requirement (3) above).

The reinforced extended ring foundation designs given here (Figs. 4 and 5) have been compared with earlier designs for "balanced" ring foundations with radial reinforcing published in the Agricultural Materials Handling Manual (National Committee on Agricultural Engineering 1964). The two methods give very similar outside footing diameters. The extended ring design requires slightly more steel and concrete than the "balanced" footing with radial reinforcing since circumferential reinforcing is somewhat less efficient for resisting tangential moments.

This paper develops designs based on the "working stress" method of reinforced concrete design (CSA, A23.3, 1970). A comparison with the newer "limit states" method (CSA, A23.3, 1973) showed that in one example, spiral steel area A_s could be reduced by 20%. This suggests that future preparation of the metric versions of plans resulting from this work should be based on the more economical limit states method.

SUMMARY

A series of equations is developed for design of a family of extended concrete ring foundations for cast-in-place and concrete stave tower silos, based on a range of soil bearing strengths from soft to firm. To minimize risks of silos overturning, a major part of the required footing bearing area is located outside the silo wall circumference.

To resist footing moments developed by the eccentricity of the silo wall loads with respect to the centroid of the soil reaction pressure, and to resist lateral expansion pressures from the soil compressed under the silo floor, circumferential steel is placed near the bottom of the footing.

Curves of design parameters to satisfy a range of silo sizes and soil bearing strengths are included with this paper. More complete and convenient tabular design parameters based on this paper are published as Canada Plan Service leaflets 7411 Reinforced Extended Ring Foundation for 6-inch Cast-in-place Concrete Tower Silos, and 7412 Reinforced Extended Ring Foundation for 2½-inch Concrete Stave Tower Silos.

REFERENCES

BOZOZUK, M. 1974. Bearing capacity of clays for tower silos. Can. Agric. Eng. 16(1):13-17.

JOINT CSA/NBC COMMITTEE ON REINFORCED CONCRETE DESIGN. 1970. Code for the design of plain or reinforced concrete structures. CSA Standard A23.3, Canadian Standards Association, Rexdale, Ont.

JOINT CSA/NBA COMMITTEE ON REINFORCED CONCRETE DESIGN. 1973. Code for the design of concrete structures for buildings. CSA Standard A23.3-1973, Canadian Standards Association, Rexdale, Ont.

NATIONAL COMMITTEE ON AGRICULTURAL ENGINEERING. 1964. Agricultural materials handling manual. Section 6.2 types of storages. Queen's Printer, Ottawa, Ont. pp. 43—50.

NEGI, S.C., J.R. OGILVIE, and E.R. NORRIS. 1977. Silage pressures in tower silos. Part 3. Experimental model studies and comparison with some silo theories. Can. Agric. Eng. 19(2): 107-110.

STANDING COMMITTEE ON FARM BUILDING STANDARDS. 1977. Canadian farm building code. NRCC No. 15564, National Research Council of Canada, Ottawa, Ont. p. 6.