GRAPHICAL ANALYSIS OF AIRFLOW DISTRIBUTION IN GRAIN BINS USING THE FINITE ELEMENT METHOD

M.J. Miketinac[1], Shahab Sokhansanj[2], and Digvir S. Jayas[3]

[1]Department of Mathematics, University of Saskatchewan, Saskatoon, Sask. S7N 0W0, and CIRES, University of Colorado at Boulder; [2]Department of Agricultural Engineering, University of Saskatchewan, Saskatoon S7N 0W0; and [3]Department of Agricultural Engineering, University of Manitoba, Winnipeg, Man. R3T 2N2

Received 2 November 1984, accepted 8 July 1985

Miketinac, M.J., S. Sokhjansanj, and **D. Jayas.** 1986. Graphical analysis of airflow distribution in grain bins using the finite element method. Can. Agric. Eng. **28**: 23–30.

The pressure pattern of airflow through a filled grain bin is obtained by numerically solving the partial differential equation modeling the flow. The finite element method as implemented in an IMSL package is used to obtain the numerical solution. Several bin and floor configurations typical of those used on farms are analyzed. The graphic capabilities of the package are exploited to exhibit velocity vectors for these configurations. Iso-pressure lines and perspective plots of the pressure (as a function of coordinates) can also be generated as shown on a specified example. The regions of uneven flow and the stagnant regions are identified.

INTRODUCTION

In order to store wheat safely for extended time periods the wheat should be kept at a moisture content below 14.5% (WB) and at a temperature less than 15°C (Kreyger 1972). Therefore, tough and damp harvested wheat must be dried and kept cool. A popular practice to dry wheat is by forcing (~10 L/(s·m^3)) ambient air through the grain. Aeration is used with lesser air flow rates (~1 L/(s·m^3)) with the primary purpose of cooling the grain (Friesen et al. 1982). The succcess of either operation depends on the uniformity of the air flow in the grain mass. The method of introducing air into the bin, the kernel shape and size, and the shape of the bin affect the airflow distribution (Smith 1982). The fines and foreign material in grain also affect air distribution. The grain is assumed clean in this study. The stagnant zones would result in nonaerated grain. Grain in these locations spoils more easily compared with grain in the aerated regions (Sinha et al. 1981).

The objective of this work is to use a mathematical simulation model to study airflow distribution in the bin. Specifically, the stagnant and low-velocity zones are identified by a graphical representation of air velocities within the grain mass. Information about the location of stagnant and low-velocity zones can be beneficial to farmers and to bin designers. Farmers may want to inspect these zones first for signs of spoilage. Designers can manipulate design parameters (such as the uniformity of pressure distribution in the plenum) in order to reduce or eliminate these zones. Several bin and floor configurations are considered.

MATHEMATICAL MODEL

Brooker (1961) set up mathematical equations modeling the pressure field in a ventilated grain bin. Segerlind (1983) gives more recent references on the model. Brooker's model is based on two equations. The first expresses the conservation of mass of air

$$\operatorname{div} \vec{\mathbf{V}} = 0 \tag{1}$$

where $\vec{\mathbf{V}}$ is the air velocity vector. Equation 1 comes from the fact that for an isothermal flow at about atmospheric pressures the air density remains constant. The second equation states that the air velocity is caused by pressure differences

$$\operatorname{grad} P = -f(V)\frac{\vec{\mathbf{V}}}{V} \tag{2}$$

where V is the magnitude of the velocity and $f(V)$ is an experimentally determined function. By defining a function K (known as the flow resistance parameter)

$$K = \frac{f(V)}{V} \tag{3}$$

the following equation results by combining Eqs. 1, 2 and 3

$$\operatorname{div}\left(\frac{1}{K}\operatorname{grad}P\right) = 0 \tag{4}$$

Equation 4 is a quasilinear elliptic partial differential equation of second order describing the pressure distribution in the bin (Miketinac and Sokhansanj 1984).

The most common form of the function $f(V)$ is (Segerlind 1982, 1983)

$$f(V) = \left(\frac{1}{A}V\right)^{(1/B)} \tag{5}$$

where A and B are, in general, piecewise constant functions of the magnitude of the pressure gradient. Substituting Eqs. 5 in 3 and using the relationship 2 the reciprocal of K becomes

$$\frac{1}{K} = A\left(\frac{\mathrm{d}P}{\mathrm{d}n}\right)^{B-1} \tag{6}$$

where $\mathrm{d}P/\mathrm{d}n$ is the magnitude of the pressure gradient.

The boundary conditions for the pressure P needed to solve Eq. 4 are formulated in the following way. The bin walls are impervious to air which implies the vanishing of the derivative of P in the direction perpendicular to a wall. The pressure itself is specified everywhere else. The air pressure in the plenum is a specified nonzero value. The air pressure at the top grain surface is zero. The types of bin with floor configurations for air entrance analyzed in this study are given in Fig. 1.

The constants $A = 32$ and $b = 0.8$ used in this work are taken from Shedd (1953) and are for clean wheat with uniform moisture content. A and B are assumed to be the same in the horizontal and vertical directions.

SOLUTION TECHNIQUE

Obtaining a numerical solution of Eq. 4 is a difficult mathematical problem. The complexity of the problem, stemming from the existence of singularities and the nonlinearity of the partial differential equation, is greatly magnified when the problem must be considered as three-dimensional due to the shape of the bin and/or the location of the ducts. For these reasons the problem is assumed two-dimensional. This is appropriate when the

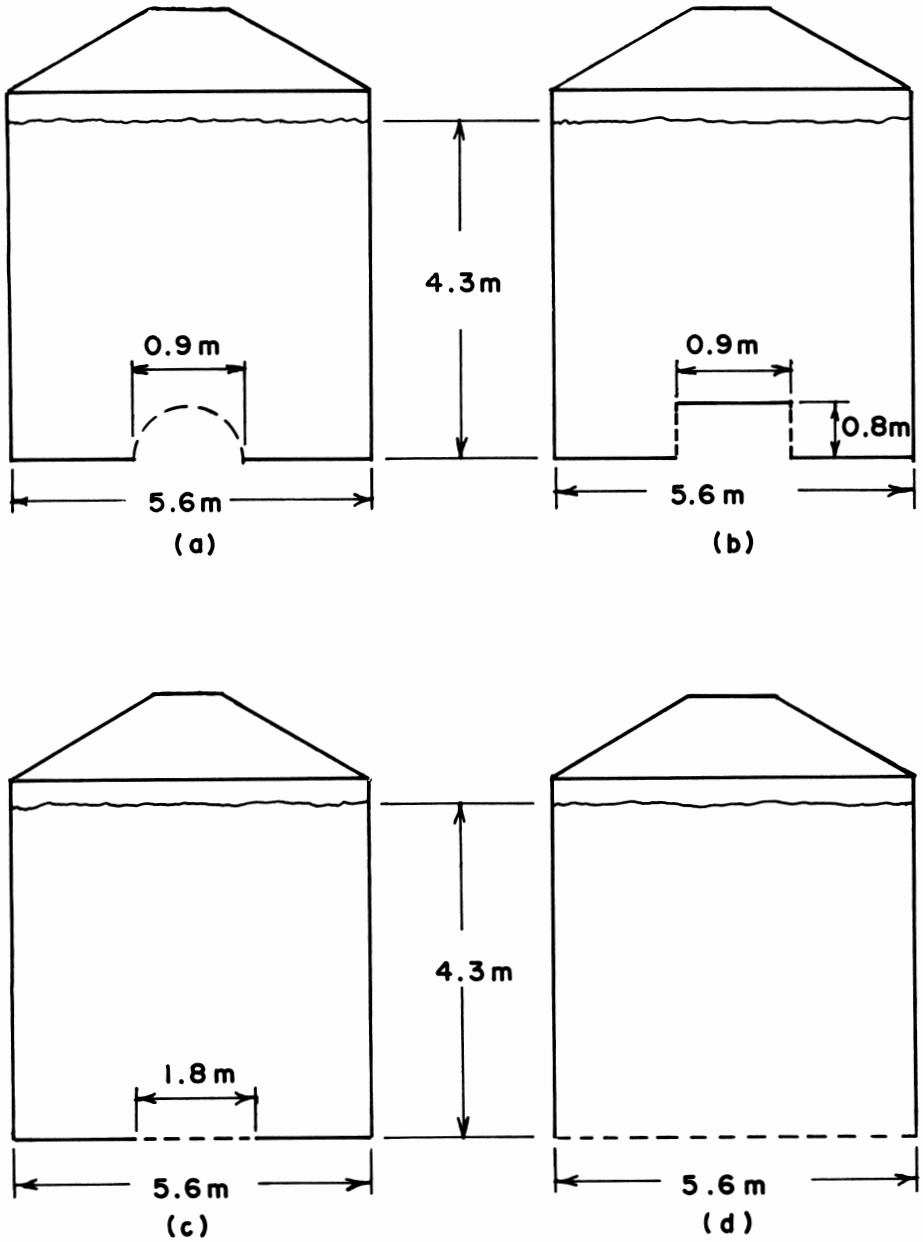

Figure 1. Schematic representations of grain-filled bins with different configurations for air introduction during aeration. Solid lines indicate no airflow across the boundary, dotted lines indicate the location of introduced air during aeration, and jagged lines indicate the top grain surface at atmospheric pressure.

grain bin can be approximated by an isotropic system.

Equation 4 with the described boundary conditions is solved numerically using a finite element package TWODEPEP (developed and distributed by IMSL (1982)). The package contains an automatic mesh generator, that allows the fineness of the mesh to be regulated by the user. This is an important option as the bin usually contains special points, where the mesh must be refined in order to improve the accuracy of the computed solution. The package also contains a graphical postprocessor capable of supplying printer plots of the mesh as well as plots of vector fields and three-dimensional perspective plots of scalar functions. The solution is output at the points of a rectangular grid (defined by the user), which is very suitable for contouring plots of scalar functions. However, the subroutine that plots contour lines must be supplied by the user.

Miketinac and Sokhansanj (1984) demonstrated the validity of the numerical solution of Eq. 4 using TWODEPEP in an earlier report.

RESULTS AND DISCUSSION

For configuration (a) in Fig. 1 the predicted isopressure lines, velocity vectors, and pressure surface are given in Fig. 2. The length of an arrow in Fig. 2(a) indicates the magnitude of the velocity. As drying rate is directly affected by air velocity, Fig. 2 shows that grain would dry more uniformly in the upper parts of the bin because the air flow is fairly uniform in this region. Stagnant and low-velocity zones occur in the lower corners of the bin. Since microorganisms multiply and develop in damp hot grain (RH 75%) at a temperature of 20–35°C (Sinha and Muir 1973), these locations would be favorable for microorganism development because of the slow drying and/or cooling of grain in these regions.

For other configurations of Fig. 1 only velocity vector fields are given. For configuration (b) of Fig. 1, the stagnant and low velocity zones are predicted in the bottom corners of the bin as presented in Fig. 3. For configuration (c) these zones are also observed in the same corners as shown in Fig. 4. As expected, for fully perforated floor (configuration (d)), the velocity vectors are uniform throughout the grain mass as shown in Fig. 5.

Figure 7 shows that for configuration (f) stagnant and low-velocity zones are predicted in the hopper portion and in the top junction corners; this latter stagnant zone is more easily observed in plots with finer resolution. The large velocities near the outlet may not result in over-drying of the grain because of high humidity in the air. The stagnant and low-velocity zones for configuration (e) are predicted near top junction corners (Fig. 6), whereas for configuration (g) these zones are predicted in two regions, one near the hopper junction and the other near the top junction as shown in Fig. 8. The possible explanation for a stagnant zone near the top is that the air flow has to turn around to escape through the outlet of the bin. During this turning the air flow opposes the existing upward velocity vector and thus creates these stagnant and low-velocity zones.

It is expected that fully perforated floors would provide uniform air flow in the bin. This was found to occur in flat bins as shown in Fig. 5, but not in hopper bins as shown in Fig. 7. In the hopper bins with fully perforated hoppers the grain mass in hopper section had low air flow rates. The size of this stagnant zone was very much dependent on the angle of the hopper wall to the vertical. The smaller angles resulted in larger stagnant zones. These stagnant zones were formed because the velocity vectors towards the center of the bin cancel each other out. Consider a hypothetical case in which hopper walls make a zero angle to the vertical and air is still forced through the hopper section. In this case the

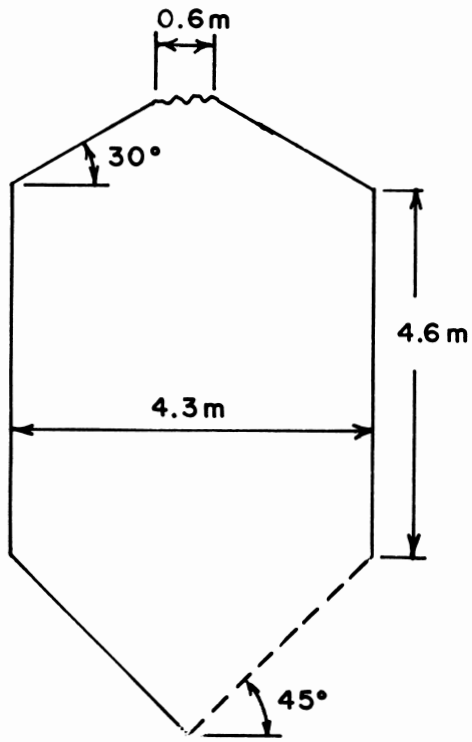

(e)

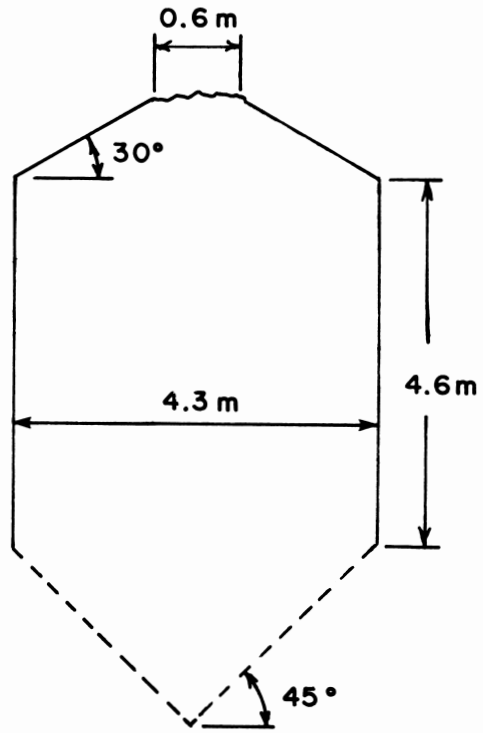

(f)

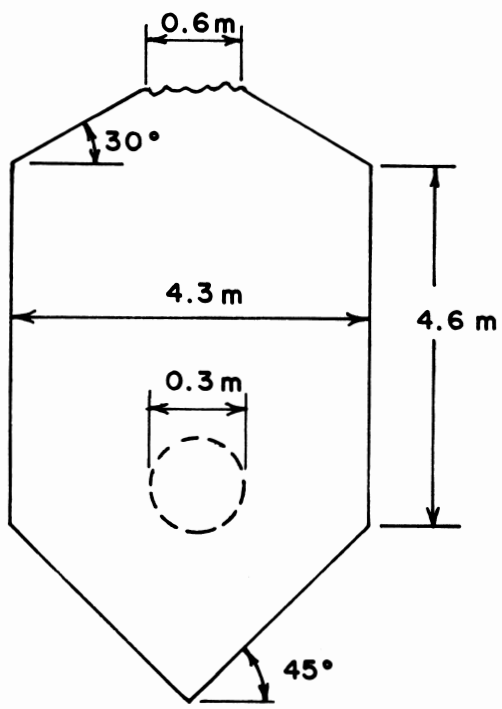

(g)

Figure 1. Continued

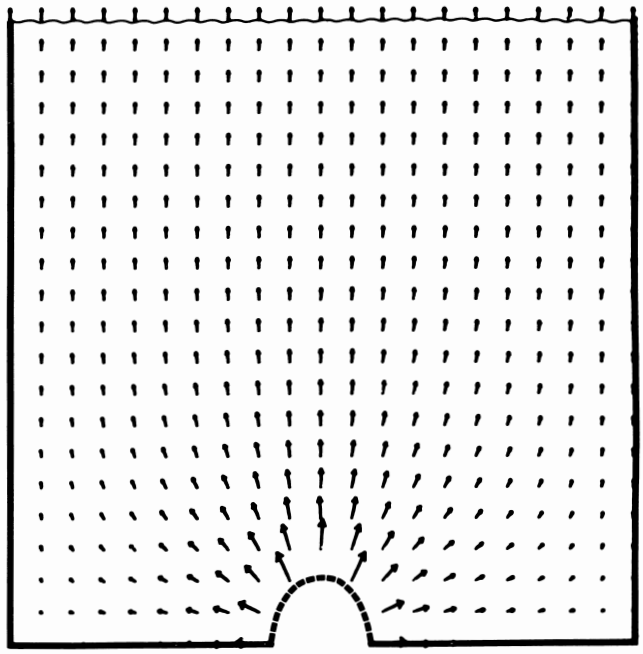

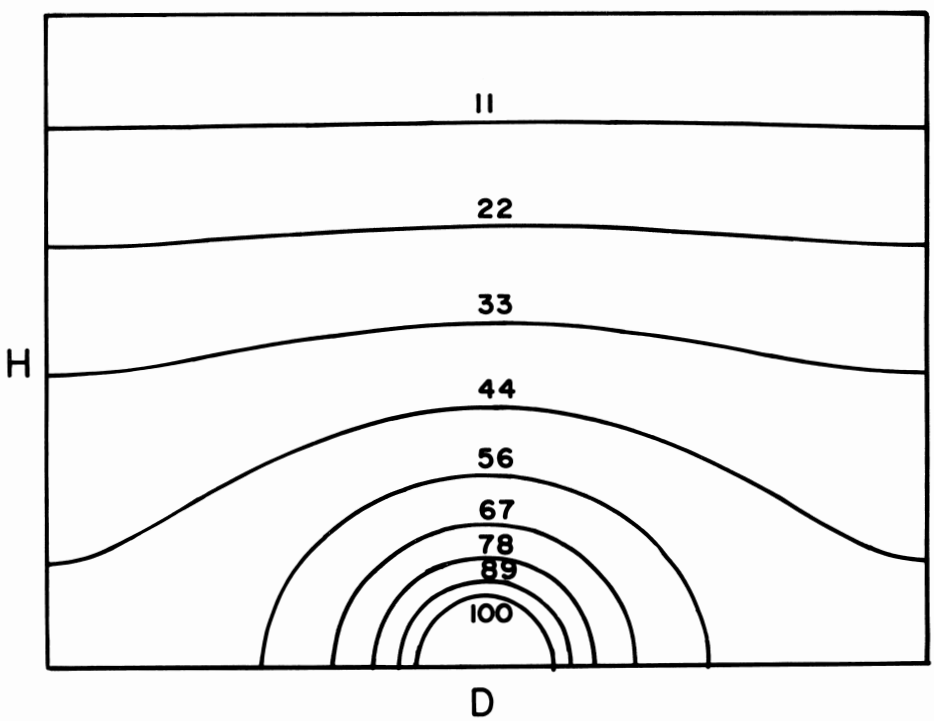

Figure 2. The predicted results for configuration (a) in Fig. 1. (a) velocity vector field, (b) isopressure lines shown as percent of the duct pressure and (c) pressure surface.

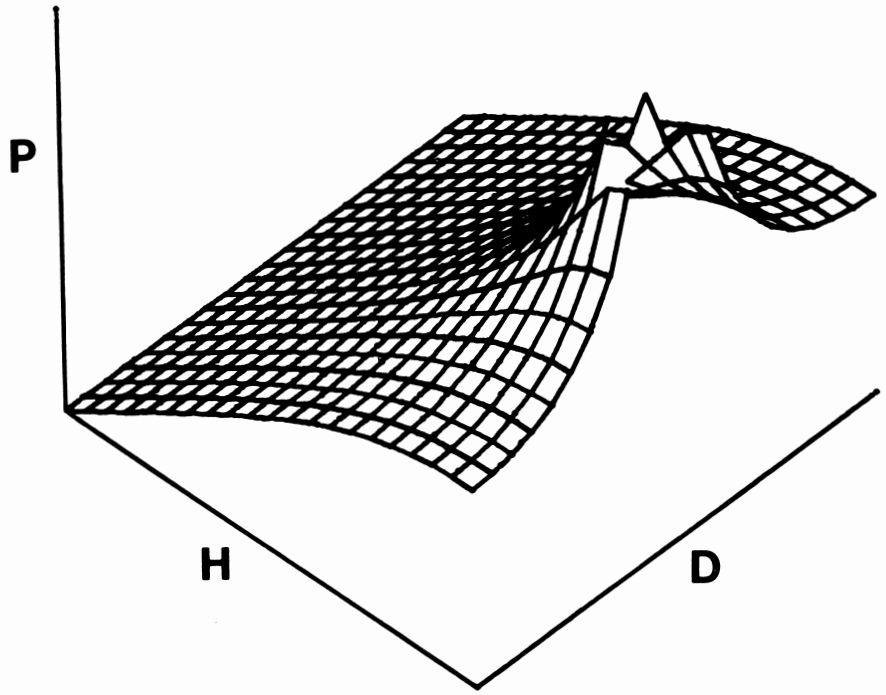

Figure 2. Continued

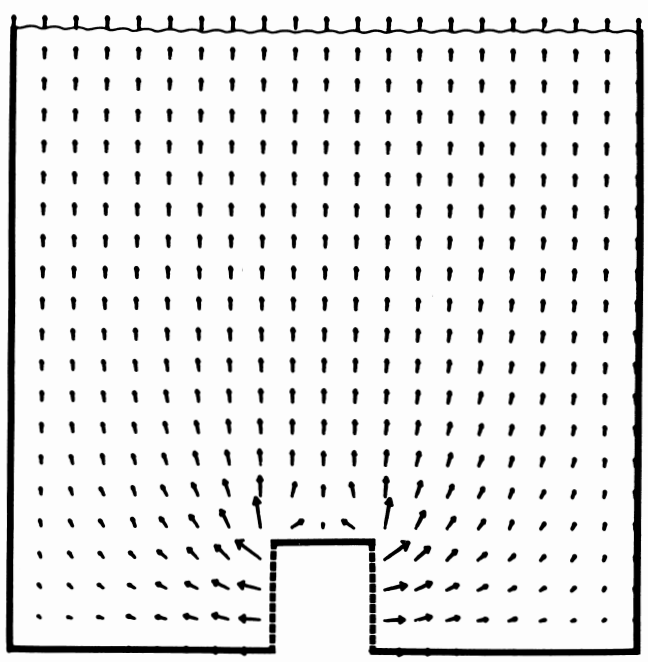

Figure 3. The predicted velocity vector field for configuration (b) in Fig. 1.

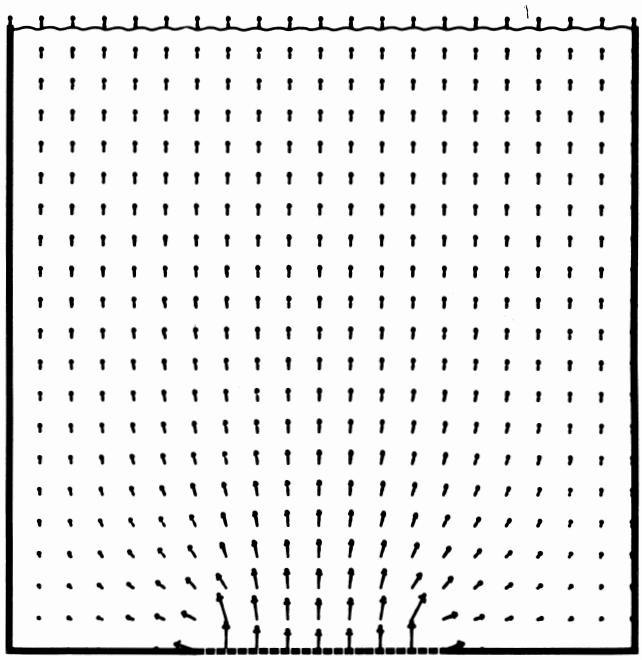

Figure 4. The predicted velocity vector field for configuration (c) in Fig. 1.

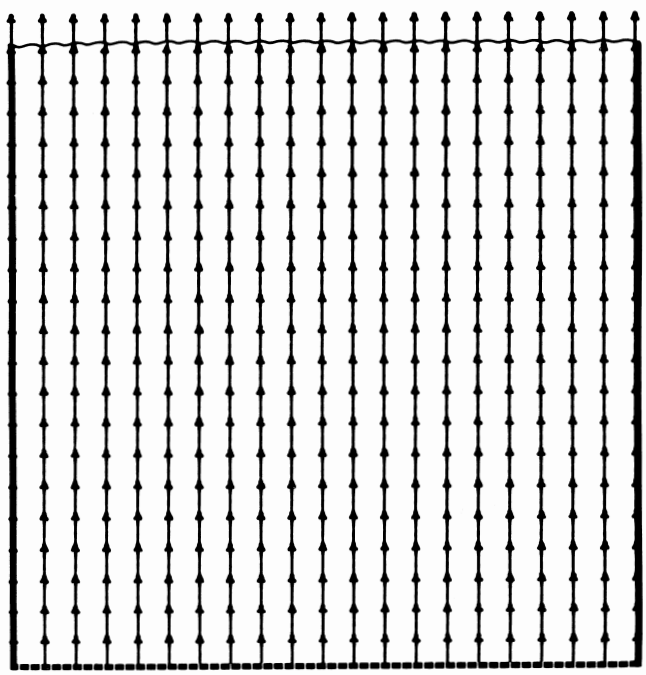

Figure 5. The predicted velocity vector field for configuration (d) in Fig. 1.

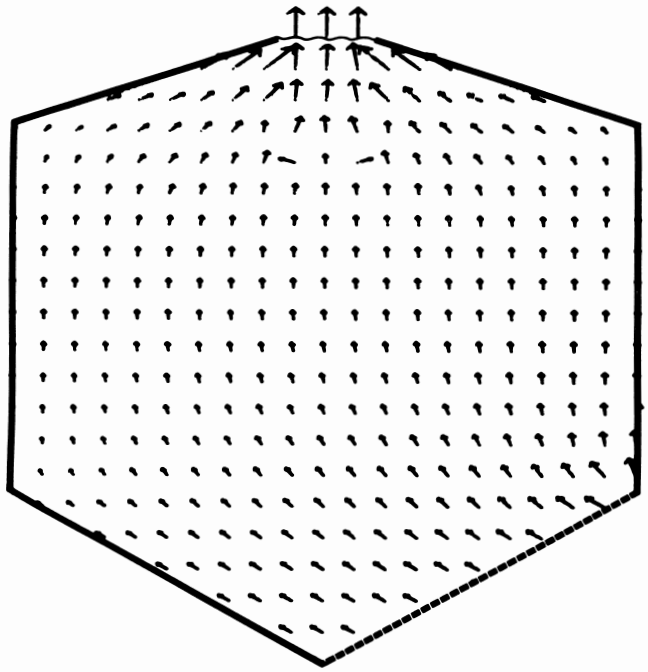

Figure 6. The predicted velocity vector field for configuration (e) in Fig. 1.

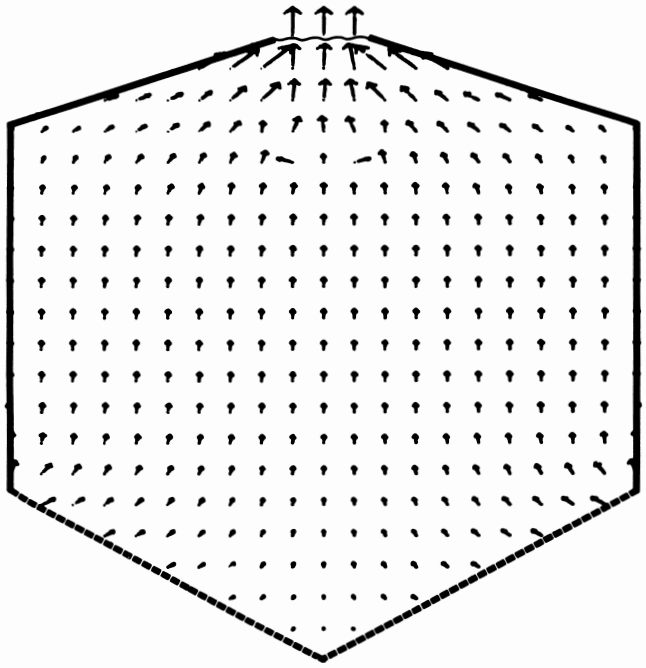

Figure 7. The predicted velocity vector field for configuration (f) in Fig. 1.

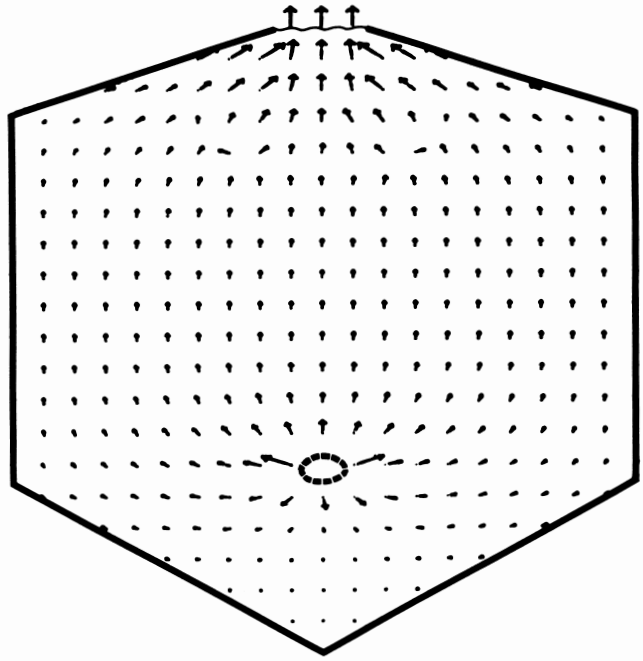

Figure 8. The predicted velocity vector field for configuration (g) in Fig. 1.

velocity of entering air would only have horizontal a component towards the center of the bin and due to opposing effects would result in a net zero velocity zone. This explains why smaller hopper inclinations result in larger and severe stagnant zones.

CONCLUSIONS

The mathematical modeling of the air flow distribution in grain bins, along with finite element solution can be used to display airflow patterns graphically. This allows identification of stagnant and low-velocity regions in the flow. The results show that there are more stagnant and low-velocity zones in hopper bottom bins than in the flat bottom bins. It is expected that more accurate graphical representation of the air flow will result from solving a three-dimensional problem.

REFERENCES

BROOKER, D. B. 1961. Pressure patterns in grain-drying systems established by numerical methods. Trans. ASAE (Am. Soc. Agric. Eng.) 4:72–74,77.

FRIESEN, O. H.,H. P. HARMS and D. N. HUMINICKI. 1982. Movement of natural air through grain. Publ. Agdex 732-1. Manitoba Department of Agriculture. Winnipeg, Man.

IMSL. 1982. TWODEPEP user's manual. IMSL Inc., Houston, Texas.

KREYGER, J. 1972. Drying and storing grains, seeds and pulses in temperate climates. Bulletin 205, Institute for Storage and Processing of Agricultural Produce, Wageningen, The Netherlands.

MIKETINAC, M. J. and S. SOKHANSANJ. 1985. Velocity-pressure distribution in grain bins—Brooker's model. Int. J. Num. Meth. Eng. 21: 1067–1075

SEGERLIND, L. J. 1982. Solving the nonlinear air flow equation. ASAE Paper No. 82-3017. Am. Soc. of Agric. Engineers, St. Joseph, Mich.

SEGERLIND, L. J. 1983. Presenting velocity-pressure gradient data for use in mathematical models. Trans. ASAE (Am. Soc. Agric. Eng.) 26(4):1245–1248.

SINHA, R. N., J. T. MILLS, H. A. H. WALLACE, and W. E. MUIR. 1981. Quality assessment of rapeseed stored in ventilated and non-ventilated farm bins. Sci. Aliment. 1(2):247–263.

SINHA, R. N. and W. E. MUIR. 1973. Grain storage part of a system. AVI Pub. Co., Westport, Conn.

SHEDD, C. K. 1953. Resistance of grains and seeds to air flow. Agric. Eng. 34(9):616–619.

SMITH, E. A. 1982. 3-Dimensional analysis of air velocity and pressure in beds of grain and hay. J. Agric. Eng. Res. 27:101–117.